HOMEFINITI

Single Family

Oscar | Elevon 60's

Elevon

NEW HOME SPECIALIST
Lacey Eskenazi
Call Us @ 469-945-6613
elevon@trophysignaturehomes.com

Priced From

$384,900

3 Elevations Available

- **4** Bedrooms
- **3** Bathrooms
- **2,131+** Sq. Ft.
- **2** Car Garage

Perfect proportions and an abundance of well-placed features make the Oscar a blockbuster design you'll love coming home to. Say hello to the sun as it streams through oversized windows in your primary suite. Just around the corner is your home office, an inviting space that encourages creativity and offers an escape to the back patio or the ultra-modern kitchen when it's time for a break. Life is centered in the great room with a cozy family room, chic dining area and an ultra-modern kitchen. Three additional bedrooms located near the front of the house are private, quiet and serene.

All square footage is approximate. Renderings are artist's conceptions and may vary slightly from the actual home. Homes may be built in reverse of plans shown, depending on site conditions. Minor architectural changes may be made occasionally at the option of the builder. Please contact your Sales Consultant for details.

HOMEFINITI

Single Family

Oscar | Elevon 60's

Elevon

NEW HOME SPECIALIST
Lacey Eskenazi
Call Us @ 469-945-6613
elevon@trophysignaturehomes.com

First Floor

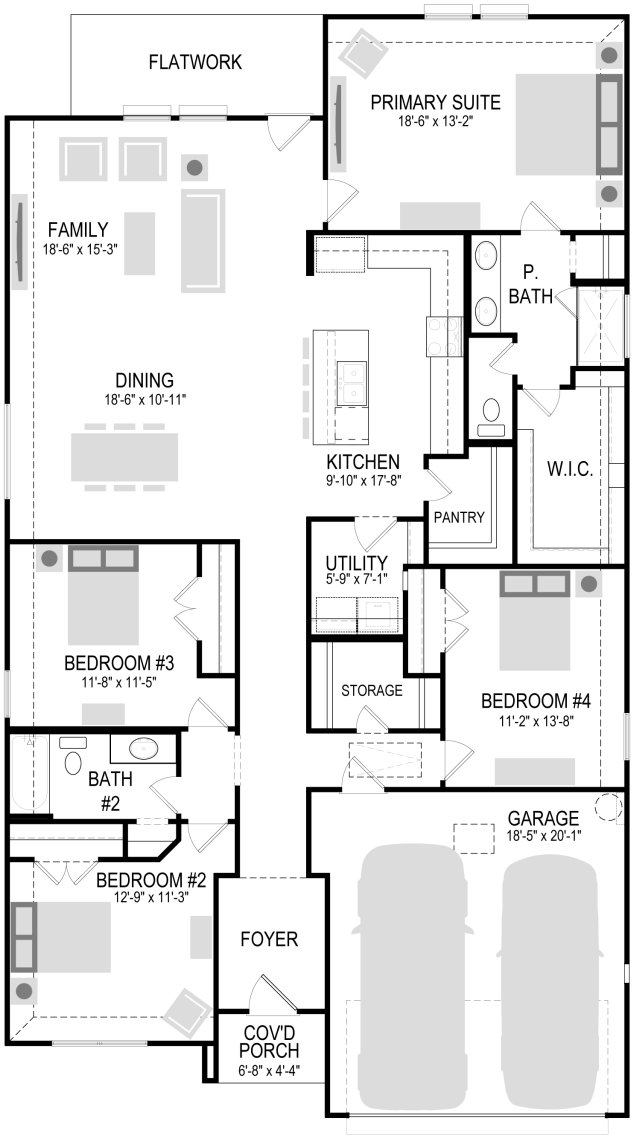

All square footage is approximate. Renderings are artist's conceptions and may vary slightly from the actual home. Homes may be built in reverse of plans shown, depending on site conditions. Minor architectural changes may be made occasionally at the option of the builder. Please contact your Sales Consultant for details.

HOMEFINITI

Single Family

Oscar | Elevon 60's

Elevon

NEW HOME SPECIALIST
Lacey Eskenazi
Call Us @ 469-945-6613
elevon@trophysignaturehomes.com

Option

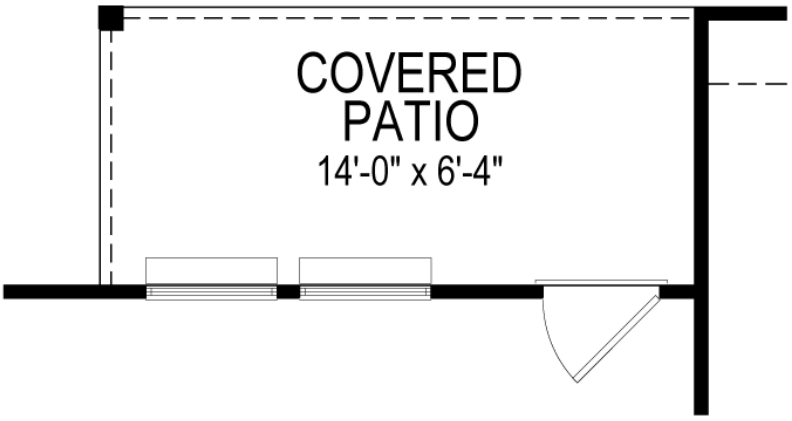

COV'D PATIO

All square footage is approximate. Renderings are artist's conceptions and may vary slightly from the actual home. Homes may be built in reverse of plans shown, depending on site conditions. Minor architectural changes may be made occasionally at the option of the builder. Please contact your Sales Consultant for details.

HOMEFINITI

Single Family

Oscar | Elevon 60's

Elevon

NEW HOME SPECIALIST
Lacey Eskenazi
Call Us @ 469-945-6613
elevon@trophysignaturehomes.com

Option

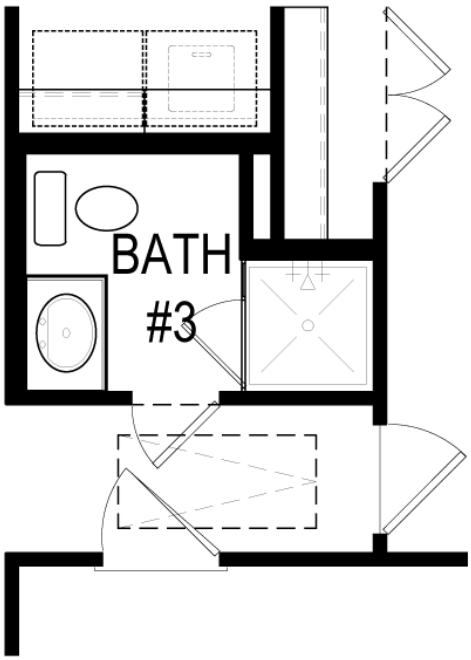

BATH #3

All square footage is approximate. Renderings are artist's conceptions and may vary slightly from the actual home. Homes may be built in reverse of plans shown, depending on site conditions. Minor architectural changes may be made occasionally at the option of the builder. Please contact your Sales Consultant for details.